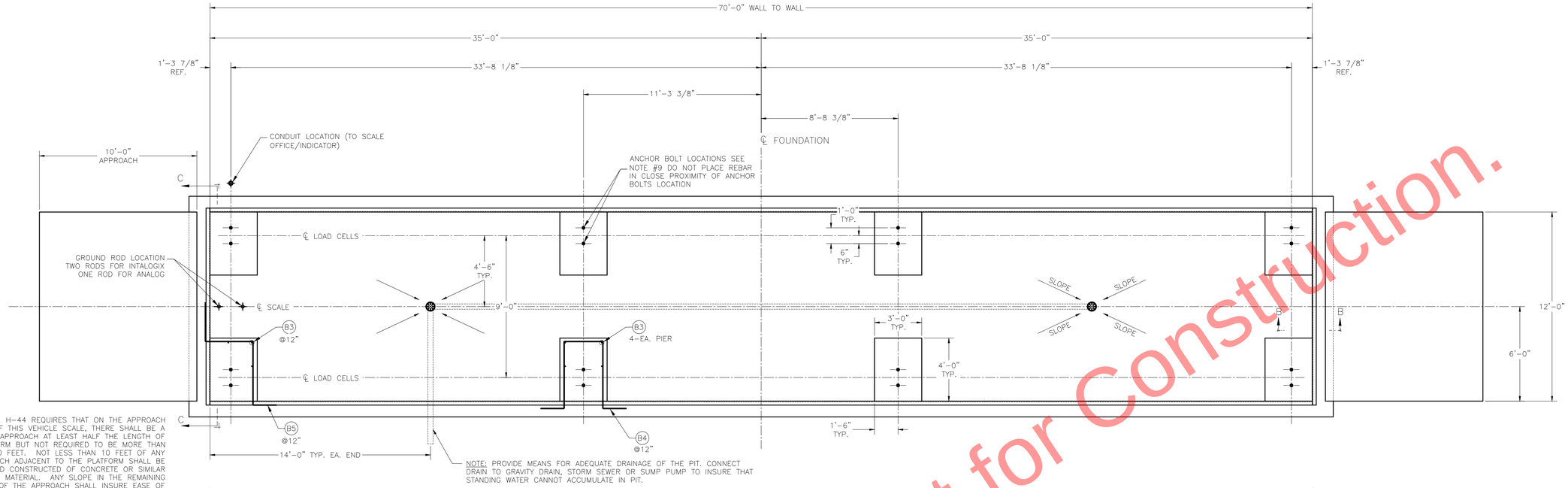

N.I.S.T. H-44 REQUIRES THAT ON THE APPROACH ENDS OF THIS VEHICLE SCALE, THERE SHALL BE A STRAIGHT APPROACH AT LEAST HALF THE LENGTH OF THE PLATFORM BUT NOT REQUIRED TO BE MORE THAN 40 FEET. NOT LESS THAN 10 FEET OF ANY APPROACH ADJACENT TO THE PLATFORM SHALL BE LEVEL AND CONSTRUCTED OF CONCRETE OR SIMILAR DURABLE MATERIAL. ANY SLOPE IN THE REMAINING PORTION OF THE APPROACH SHALL INSURE EASE OF VEHICLE ACCESS, EASE FOR TESTING PURPOSES, AND DRAINAGE AWAY FROM THE SCALE.

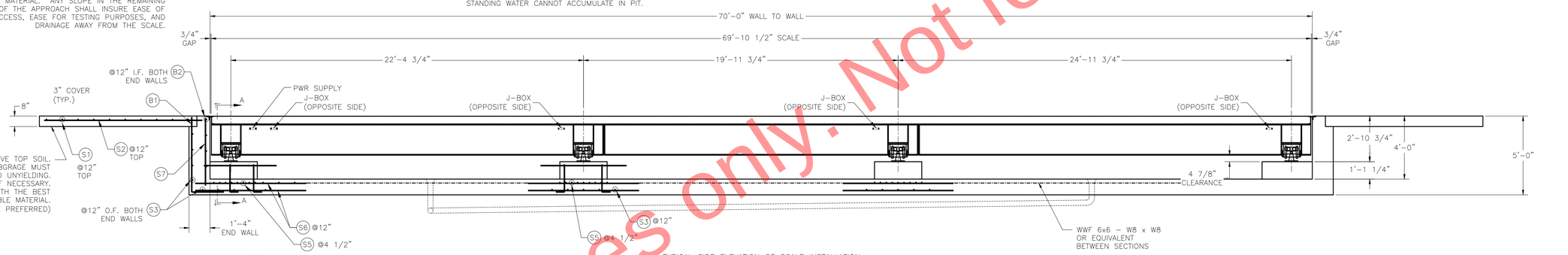

TYPICAL SIDE ELEVATION OF SCALE INSTALLATION

NOTES:

1. FOUNDATION DESIGN IS BASED ON A MINIMUM SOIL BEARING CAPACITY OF 1500 LB/SQ. FT. FOR SOIL CONDITIONS WHICH DO NOT MEET THIS SPECIFICATION, CONSULT WITH THE THURMAN SCALE COMPANY.
2. PIT FLOOR MUST HAVE AN EFFECTIVE DRAIN SYSTEM SO THAT THE PIT FLOOR REMAINS REASONABLY DRY AND CLEAN.
3. THE TOPS OF THE PIT WALLS MUST BE ABOVE THE EXISTING GRADE LEVEL SO THAT WATER WILL DRAIN AWAY FROM THE SCALE.
4. IN AREAS OF THE COUNTRY WHERE THERE IS SEVERE FREEZING, INCREASE THE DEPTH OF THE FOUNDATION SO THAT THE BOTTOM EXTENDS BELOW THE FROST LINE, OR PROVIDE A MINIMUM OF 12" FREE DRAINING GRANULAR MATERIAL TO PREVENT FROST HEAVE.
5. REINFORCING STEEL IS TO CONFORM TO ASTM A615 GRADE 60 SPECIFICATIONS.
6. CONCRETE OF 4000 PSI MIN. COMPRESSIVE STRENGTH WITH AIR ENTRAINMENT 5-7% IS REQUIRED FOR PIT. CONSOLIDATE CONCRETE INTO POSITION BY VIBRATING.
7. PIERS MUST BE LEVEL AND IN THE SAME PLANE WITHIN ±1/8 INCH.
8. EXCAVATION, FORMS, REINFORCING STEEL, AND CONCRETE FURNISHED BY OTHERS.
9. DRILL TYPE ANCHOR BOLTS ARE RECOMMENDED. SEE SECTION B-B.
10. FOUNDATION REQUIREMENTS VARY FROM STATE TO STATE. CHECK WITH LOCAL WEIGHTS AND MEASURES DIVISION BEFORE CONSTRUCTION.

DECK NOTES:

1. REINFORCING STEEL IS TO CONFORM TO ASTM A-615 GRADE 60.
2. CONCRETE OF 4000 PSI MINIMUM COMPRESSIVE STRENGTH IS REQUIRED, WITH AIR ENTRAINMENT OF 5-7 PERCENT IF SUBJECTED TO FREEZE/THAW CYCLES. CONSOLIDATE THE CONCRETE INTO PLACE BY USING A VIBRATOR.
3. CORRUGATED SHEET REQUIREMENTS: A 10' WIDE SCALE REQUIRES (5) SHEETS MIN. TO COVER THE DECK WIDTH. SHEET LENGTHS MAY VARY, BUT ENDS MUST REST OVER (OR LAP OVER) A CROSS BEAM. TACK WELD IN PLACE AS NEEDED. RECOMMENDED SHEET SIZE: 28 GA. X 30 INCH WIDE (MIN.), 3/4 INCH MAX. CORRUGATE HEIGHT (MAXIMUM PROFILE) SUPPORT SHEETING DURING POURING AND CURING AS REQUIRED.
4. MANHOLE REQUIREMENTS: MANHOLE RING & COVER (NEENAH #R06044A OR EQUIVALENT) IS REQUIRED TO GAIN ACCESS TO THE PIT, UNLESS OTHER MEANS OF ENTRY ARE PROVIDED. BEND BARS AROUND MANHOLE, DO NOT CUT.
5. REBAR, CONCRETE, CORRUGATED SHEETS AND MANHOLES ARE SUPPLIED BY OTHERS UNLESS SPECIFIED ON THE SALES ORDER.

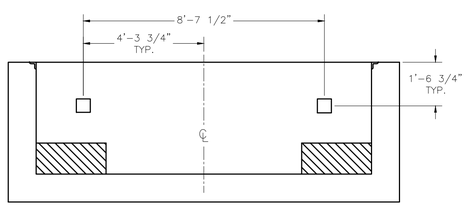

SECTION C-C

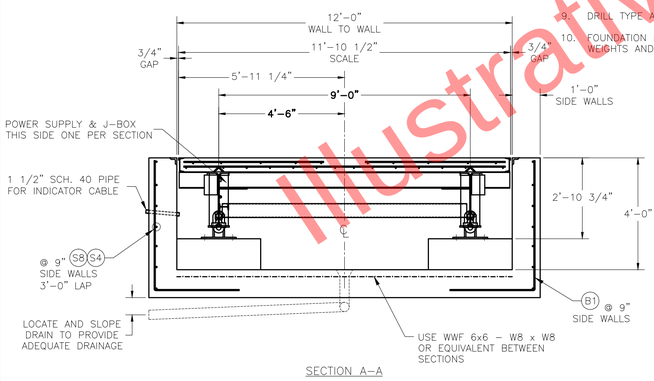

SECTION A-A

REBAR PLACEMENT SCHEDULE

BARS B1, B3 — BARS B2 — BARS B4 — BARS B5

BAR SYM	BAR SIZE	QTY.	BAR LENGTH	A	B	C	WEIGHT (LBS)	REMARKS
S1	#4	20	11'-6"				154	LATERAL APPROACH
S2	#4	24	9'-6"				153	LONG. APPROACH
S3	#4	28	13'-6"				253	O.F. END WALL; LAT. BTM. FLR.
S4	#4	56	20'-0"				749	LONG. SIDE WALL (SPLICE 4-S4 BARS)
S5	#6	36	13'-6"				325	LAT. TOP FLR. EA. SECTION
S6	#4	104	7'-0"				487	LONG. FLOOR EA. SECTION
S7	#4	28	4'-0"				75	VERT. END WALL
B1	#4	212	7'-6"	4'-6"	3'-0"		1,063	VERT. WALLS
B2	#4	8	20'-0"	12'-8"	3'-8"		107	IN END WALL
B3	#4	28	2'-0"	1'-6"	0'-6"		38	(3) EA. END; (4) EA. INT. PIER
B4	#4	4	14'-6"	2'-6"	4'-0"	2'-0"	39	CENTER PIER/WALL
B5	#4	4	11'-0"	3'-0"	4'-0"	2'-0"	30	END PIER/WALL
TOTAL DECK REBAR							3,473	

PLUS APPROX. 600 SQFT. OF WWF 6x6 - W8xW8

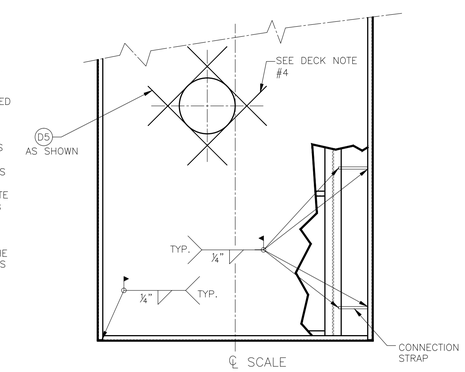

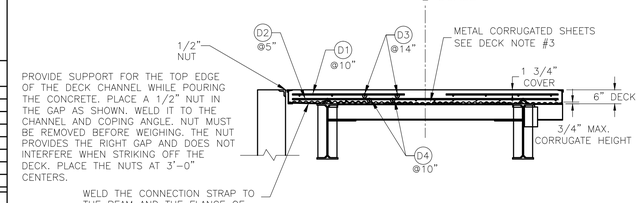

PROVIDE SUPPORT FOR THE TOP EDGE OF THE DECK CHANNEL WHILE POURING THE CONCRETE. PLACE A 1/2" NUT IN THE GAP AS SHOWN. WELD IT TO THE CHANNEL AND COPING ANGLE. NUT MUST BE REMOVED BEFORE WEIGHING. THE NUT PROVIDES THE RIGHT GAP AND DOES NOT INTERFERE WHEN STRIKING OFF THE DECK. PLACE THE NUTS AT 3'-0" CENTERS.

WELD THE CONNECTION STRAP TO THE BEAM AND THE FLANGE OF THE DECK CHANNEL AS SHOWN TO KEEP THE CHANNEL FROM "TILTING". PLACE BARS AT EQUAL SPACING BETWEEN OUTRIGGERS (NOT SHOWN THIS SIDE).

CONCRETE REQUIREMENTS

LOCATION	QTY. (CU. YDS.)
FLOOR (*)	38.0
APPROACHES/WALLS	26.0
PIERS	4.0
DECK	16.0
TOTAL	84.0

(*) CONCRETE QUANTITY FOR FLOOR IS CALCULATED FOR A 12" FLOOR DEPTH

DECK REBAR PLACEMENT SCHEDULE

BAR SYM	BAR SIZE	QTY.	BAR LENGTH	WEIGHT (LBS)	REMARKS
D1	#4	422	5'-0"	1,410	LATERAL TOP
D2	#4	281	11'-6"	2,159	LATERAL BTM
D3	#4	40	20'-0"	535	LONG. TOP; (SPLICE 4 BARS)
D4	#4	56	20'-0"	749	LONG. BTM; (SPLICE 4 BARS)
D5	#4	8	4'-0"	22	4 PER MH
TOTAL REBAR = 4,875 LBS					

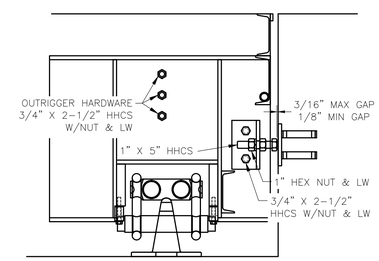

CHECKING ASSEMBLY DETAIL

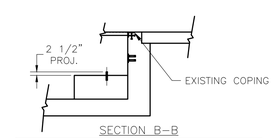

SECTION B-B

DRILL TYPE ANCHOR INFORMATION (DRILL TYPE ANCHORS PROVIDED WITH THE SCALE)

FOR THE LC BASE PLATES (16 REQUIRED) 5/8 DIA X 6" STUD TYPE ANCHORS DRILL DIA 5/8", DRILL DEPTH 3 1/2"

THIS DRAWING IS SUPPLIED AS CHECKED BELOW:

- ☒ REFERENCE (ESTIMATES ONLY, NOT FOR CONSTRUCTION)
- ☐ CERTIFIED FOR CONSTRUCTION, THURMAN SERIAL#
- CUSTOMER:
- CUSTOMER P.O.# DATE:
- ☐ CUSTOMER APPROVAL, RETURN ONE COPY.
- (ORDER ON HOLD UNTIL SIGNED COPY IS RETURNED)
- ☐ APPROVED AS DRAWN, APPROVED BY: DATE:
- ☐ APPROVED AS NOTED, APPROVED BY: DATE:

THE INFORMATION CONTAINED HEREIN AND IN ANY ACCOMPANYING DOCUMENTS IS THE PROPRIETARY AND CONFIDENTIAL PROPERTY OF THURMAN SCALE. DO NOT USE, COPY, DISCLOSE, TRANSFER, OR REPRODUCE WITHOUT WRITTEN PERMISSION. THURMAN SCALE ASSUMES NO RESPONSIBILITY ALTERATIONS TO THIS DOCUMENT AFTER ORIGINAL TRANSMISSION.

UNLESS OTHERWISE SPECIFIED, DIMENSIONS IN INCHES, AND TOLERANCES ARE AS FOLLOWS: ANGLES: ±1° 3-PLACE DECIMAL: ±0.005 2-PLACE DECIMAL: ±0.05 HOLE DIAMETERS: ±1/32"

THIRD ANGLE

8510DB 90K CLC 70' x 12'
4 SECTION DESB
FOUNDATION DRAWING - 4' DEEP PIT

MODEL: 8510

THURMAN SCALE
COLUMBUS, OH

SCALE: VARIES	DRAWN: LDC	CHECKED:	
SHEET: 1 OF 1	DATE: 5/7/13	APPROVED:	
DRAWING NUMBER: 92709-DP4			REV: —

Illustrative purposes only. Not for Construction.